RADIUS	R TOL	POWER	IRRG	CA
77.47 CX	±0.19	3	0.5	90%
Plano	-	3	0.5	90%

DIA	DIA TOL	MATERIAL	INDEX	CT	CT TOL
50.00	+0/-0.025	H-K9L	517642	9.00	±0.10

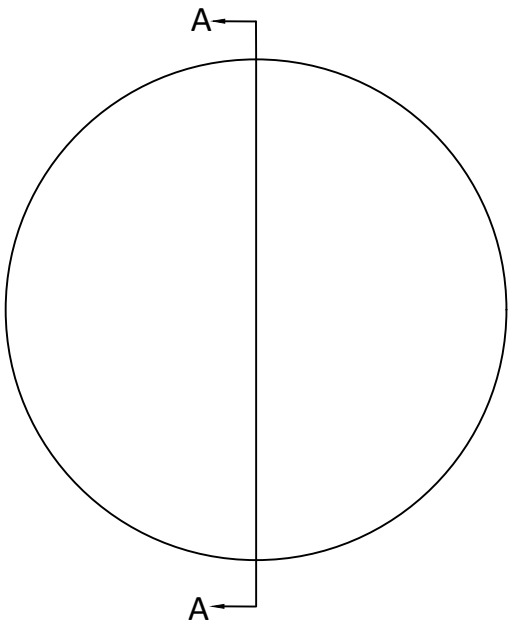

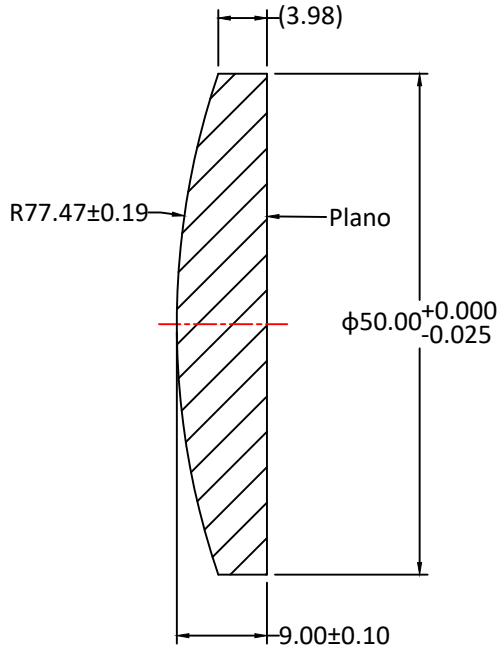

SECTION A-A

Notes:

1. ALL DIMENSIONS IN MM
2. TOLERANCE UNLESS SPECIFIED ± 0.10
3. MATERIAL: OPTICAL GLASS H-K9L
4. MANUFACTURE PER MIL-PRF-13830
5. POLISH TO TESTPLATE WITHIN POWER AND IRREGULARITY INDICATED (FRINGES)
6. FOCAL LENGTH(EFL): 150.00±1%
7. SURFACE QUALITY : 40-20 SCRATCH-DIG
8. CHAMFER EDGES: 0.5×45°MAX UNLESS SPECIFIED
9. CENTRATION TOLERANCE: 1.0' MINUTES MAX
10. COATING: S1 & S2: Ravg 0.5% @ 630-1100nm @ 0°AOI

UNLESS OTHERWISE SPECIFIED:

DIMENSIONS ARE IN mm
TOLERANCES:
FRACTIONAL ±
ANGULAR: ±3 ARC MIN
TWO PLACE DECIMAL: ±0.10
THREE PLACE DECIMAL: ±0.05

INTERPRET GEOMETRIC TOLERANCING PER:

MATERIAL
H-K9L

FINISH

DO NOT SCALE DRAWING

	NAME	DATE
DRAWN	Sally Song	10.2.24
CHECK		
ENG APPR.		
MFG APPR.		
QA	Ann Chen	12.18.24

COMMENTS

PROJECT NO.

CIZ OPTICAL
MANUFACTURER FROM CHINA

TITLE:

DIAMETER 50.00MM, EFL 150.00MM, H-K9L, NIR 1 COATED, PLANO-CONVEX LENS

SIZE	DWG.NO.	REV
A	L-PX0050150050	0

SCALE: WEIGHT: SHEET 1 OF 1